CS425
Computer Systems Architecture

Fall 2026

Dynamic Instruction Scheduling: Scoreboard

RISC Processor

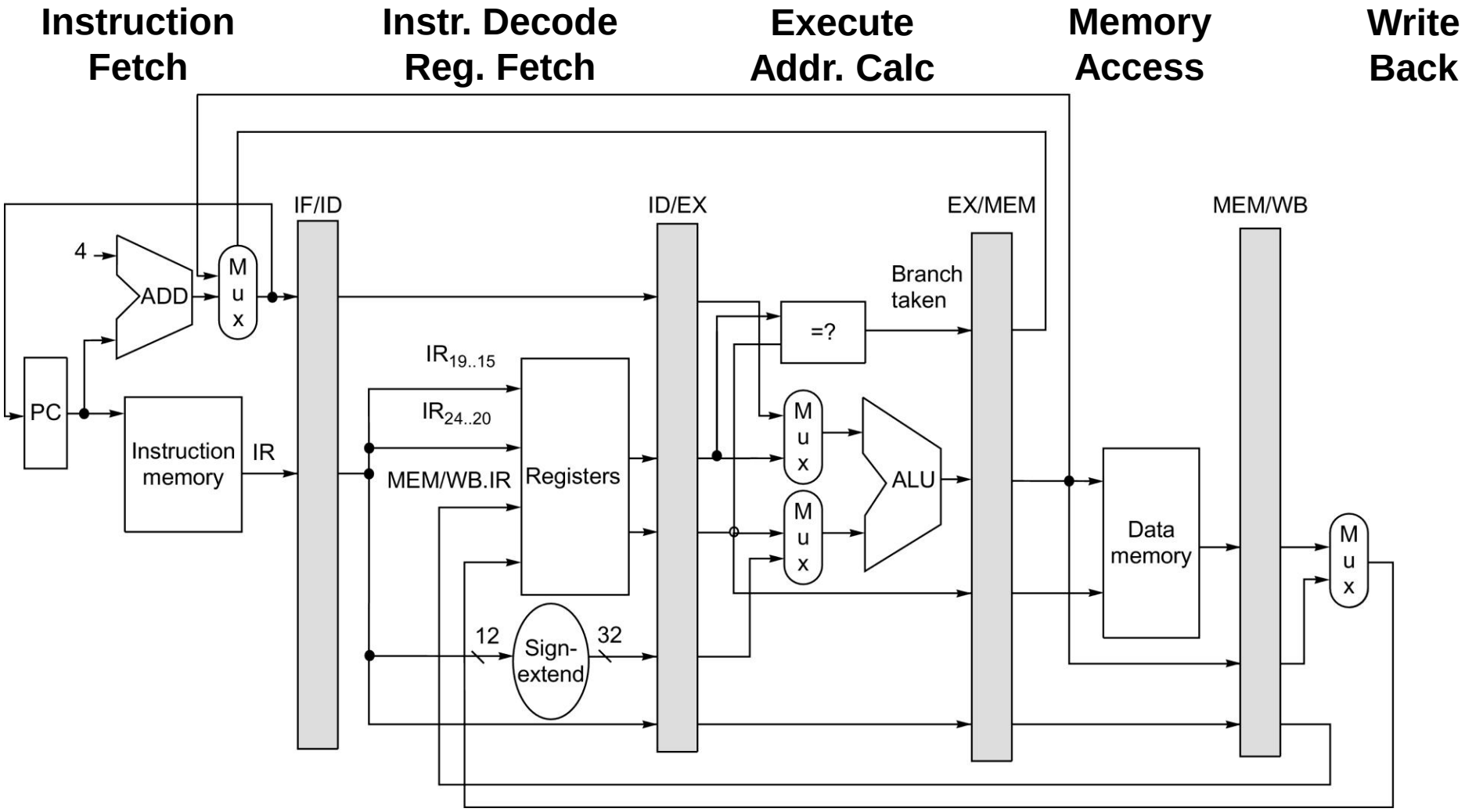

Pipelines with variable instruction latencies

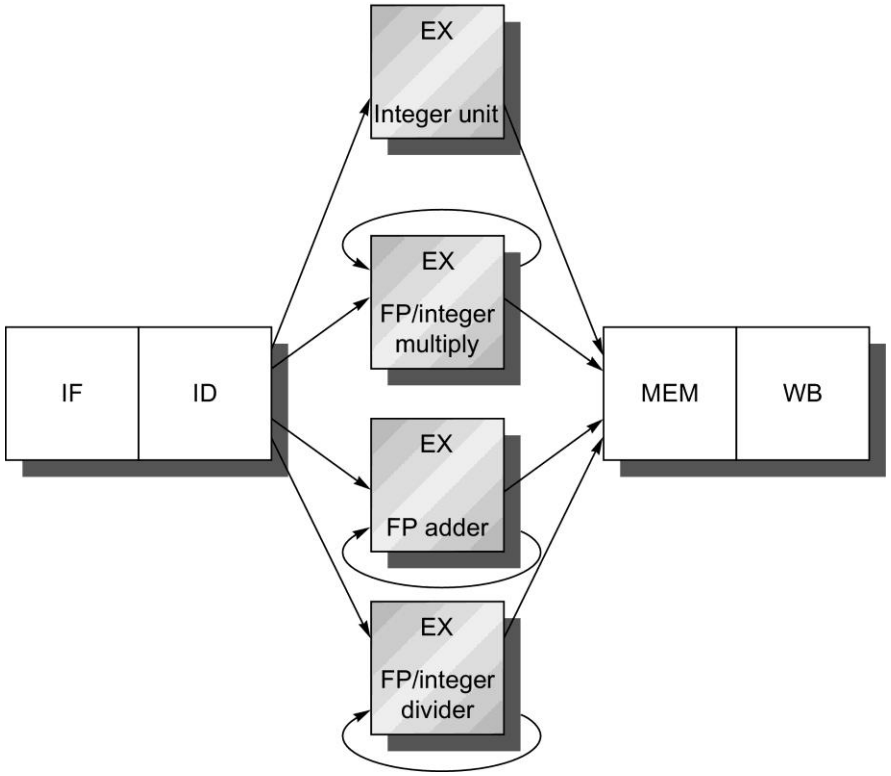

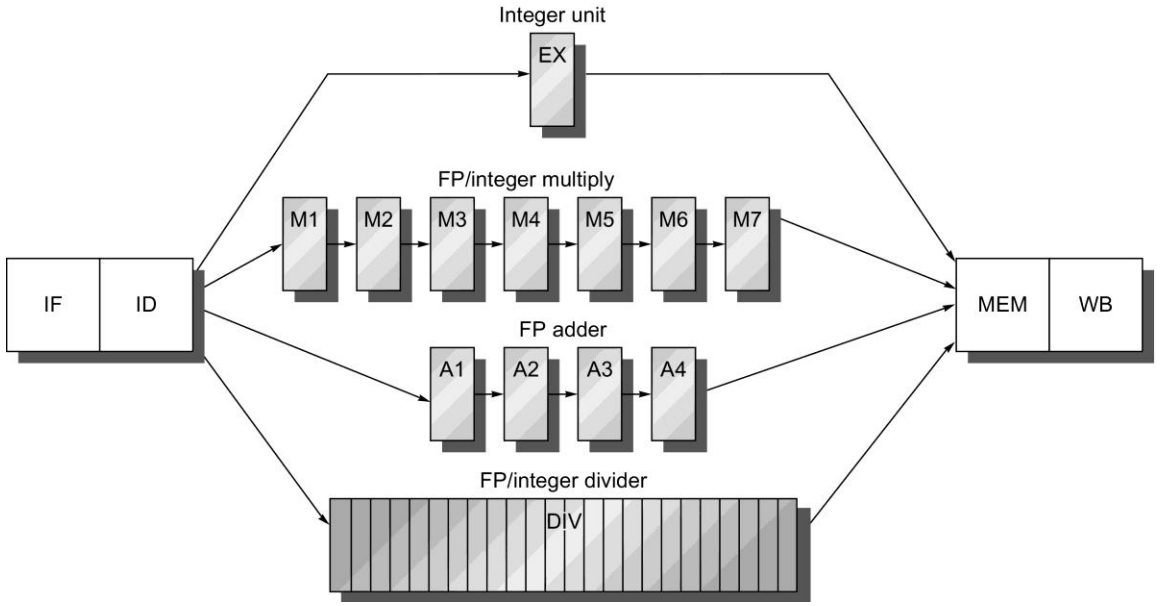

- FP and multiplication instructions need multiple cycles.
- RISC in-order pipeline does not work efficiently.

In-order Execution

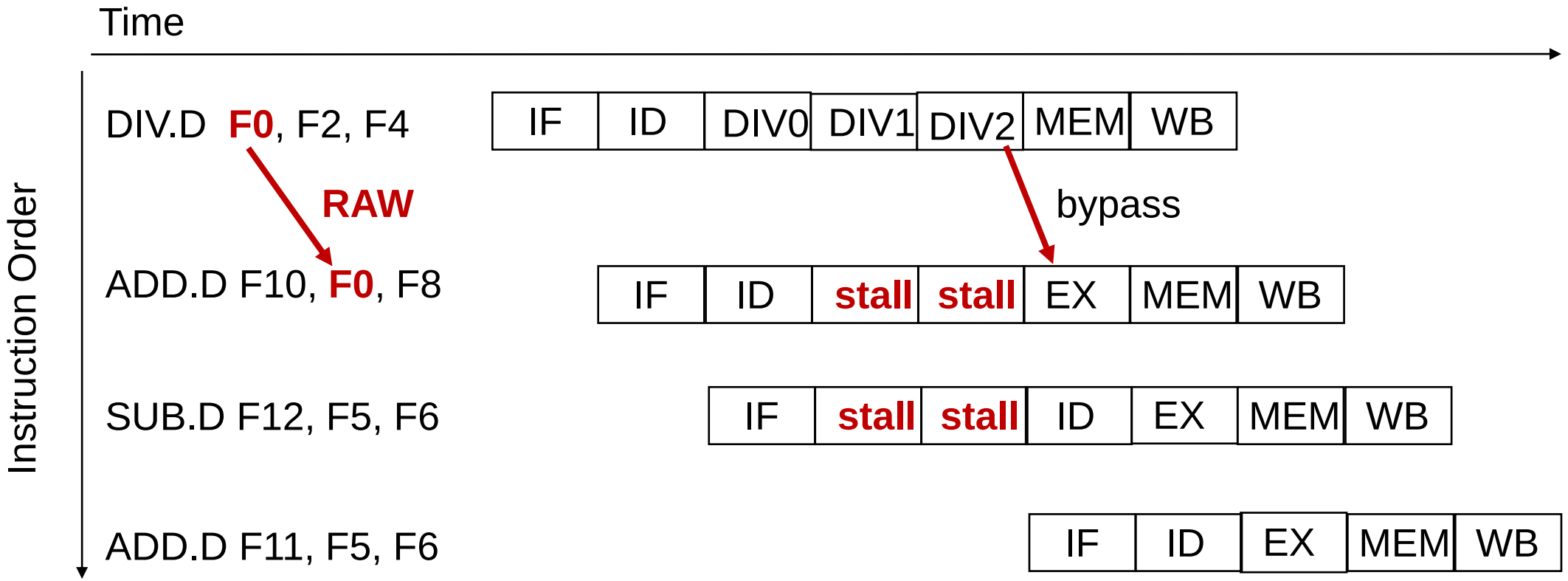

- If DIV takes 10 clock cycles (DIV0,DIV1,…, DIV9) we need 9 stall cycles

In-order vs Out-of-order (OoO – O3)

- Execution of a stage **in order**
  - The instructions enter the stage in program order
- Execution of a stage **out of order**
  - No constraint regarding the order the instructions enter the stage
- **Example 1**:
  - in order fetch
  - in order decode
  - out of order execution
  - out of order write back (commit)
- **Example 2:**
  - in order fetch
  - in order decode
  - out of order execution
  - in order write back (commit)

Out-of-order Execution

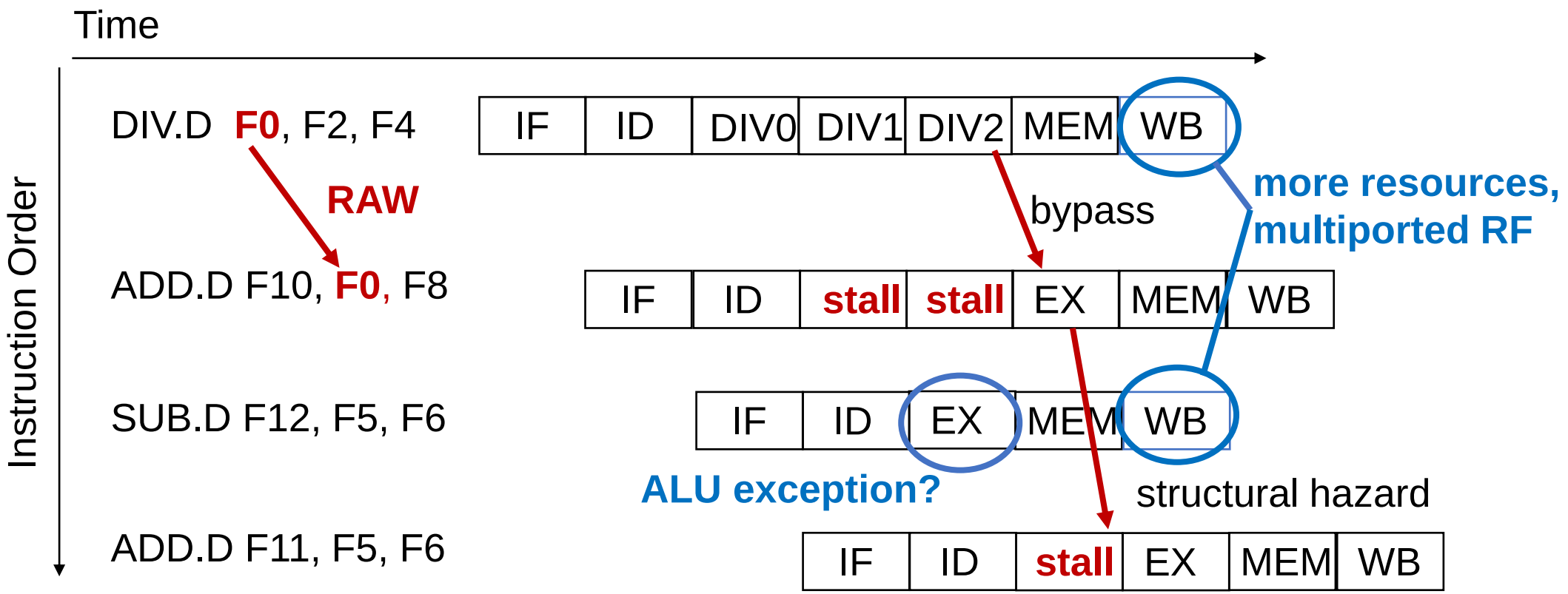

- Instructions execute when source operands (registers) values are available and not structural hazards exist
- Even if DIV takes 10 clock cycles the pipeline stalls only for 1 clock cycle

Instruction Level Parallelism

- **Instruction Level Parallelism (ILP)**
  - Potential overlap among instructions
  - Parallel or out-of-order execution
  - Requires extensions on the simple pipeline
- **Loop Level Parallelism**
  - Exploit ILP with instructions from different basic blocks (e.g. iterations of a loop)

```
for (i=1; i<=100; i++)
   x[i] = x[i] + y[i];
```

- **Must maintain:**
  - *Data flow:* the real flow of values between instructions that write (produce) values and the instructions that read (consume) these values (RAW, WAW, WAR)
  - *Exception behavior:* changes in execution order should not change the order of exceptions (and should not generate new exceptions)

Data Flow and Exception Behavior

- **Program Order:** The result of instruction execution should be the same as the sequential execution of the instructions

1. Preserve control dependencies
2. Preserve data flow: preserve data dependencies
3. Exception behavior: changing the order of instruction execution should not create new exceptions

```
DADDU    R2, R3, R4
BEQZ     R2, L1
LW       R1, 0(R2)
L1:
```

execute before branch?

Techniques to reduce stalls

- CPI = Ideal CPI + Structural stalls per instruction + RAW stalls per instruction + WAR stalls per instruction + WAW stalls per instruction
- 1st example (in-order) had 2 RAW stalls
- 2nd example (out-of-order) has only 1 structural stall
- We will study two types of techniques:

Dynamic instruction scheduling	Static instruction scheduling (SW/compiler)
Scoreboard (reduce RAW stalls)	Loop Unrolling
Register Renaming (reduce WAR & WAW stalls) • Tomasulo • Reorder buffer	SW pipelining
Branch Prediction (reduce control stalls)	Trace Scheduling

Can we use hardware techniques to achieve CPI close to 1?

- Why in hardware during program executions ?
  - It works even if we don't know the real dependencies at compile-time (e.g. memory references).
  - The compiler's job is simpler, otherwise it needs to know all HW details
  - Control dependences
  - The assembly code for a machine can execute well on another machine too.
- **Key idea:** Allow instructions that appear after a stalled instruction to execute (stall only the data dependent instruction)

```
DIV.D    F0,F2,F4
ADD.D    F10,F0,F8
SUB.D    F12,F8,F14
```

- Out-of-order execution => out-of-order completion (unless special HW is used)

Dependencies between Instructions

- What are the sources of stalls/bubbles;
  - instructions that use the same registers
- ***Parallel*** instructions can execute without imposing any stalls (if we ignore structural hazards)
  - DIV.D F0, F2, F4
  - ADD.D F10, F1, F3
- ***Dependencies*** between instructions may lead to stalls
  - DIV.D F0, F2, F4

    RAW **must enter the execution stage in order**
  - ADD.D F10, F0, F3
- The dependencies between instructions limit the order of execution of these instructions (impose in order execution). In the 2nd example ADD.D **must** execute after DIV.D has completed. On the other hand, parallel instructions **may** execute in the any order (out-of-order execution). In the 1st example ADD.D can execute before DIV.D.

Dependencies between Instructions

- **(True) Data Dependences** : instructions are data dependent when there is a chain of RAW hazards between them.

```
Loop:
        L.D     F0, 0(R1)
        ADD.D   F4, F0, F2
        S.D     F4, 0(R1)
        DADDI   R1, R1, -8
        BNE     R1, R2, Loop
```

What does this code do?

```
S.D     F0, 100(R4)
L.D     F1, 20(R6)
```

???

Dependencies between Instructions

- **Name Dependences** : instructions are name dependent when there is a WAR (anti-dependence) or WAW (output-dependence) hazard between them.

```
L.D      F0, 0(R1)

ADD.D F4, F0, F2

L.D      F0, 0(R2)

S.D      F1, 20(R6)
```

???

Spot the anti-dependence!

- **Control Dependences** : Instructions dependent via branches.

  if p1 { S1; }

Hazard Issues

- How do we prevent WAR and WAW hazards?
- How do we handle variable latency execution units?
  - Forwarding for handling RAW hazards is a lot harder!

Instruction		Clock Cycle Number																
		1	2	3	4	5	6	7	8	9	10	11	12	13	14	15	16	17
LD	F6,34(R2)	IF	ID	EX	MEM	WB												
LD	F2,45(R3)		IF	ID	EX	MEM	WB											
MULTD	F0,F2,F4			IF	ID	stall	M1	M2	M3	M4	M5	M6	M7	M8	M9	M10	MEM	WB
SUBD	F8,F6,F2				IF	ID	A1	A2	MEM	WB								
DIVD	F10,F0,F6					IF	ID	stall	stall	stall	stall	stall	stall	stall	stall	stall	D1	D2
ADDD	F6,F8,F2						IF	ID	A1	A2	MEM	WB						

RAW

WAR

Scoreboard: Out-of-Order Execution

- Split the ID stage into two different stages:
  1. **Issue:** Decode instruction, check for structural hazards. In order instruction issue.
  2. **Read Operands:** Wait until all data hazards are resolved, then read source registers. Out-of-order execution.
- Scoreboard appeared in CDC6600 (1963)
- The instructions execute when they do not depend on previous instructions (which have not been executed yet) and at the same time there are no hazards.
- CDC6600: In order issue, out-of-order execution, out-of-order commit (or completion)
  - 16 functional units: 4 floating-point units, 5 units for memory references, and 7 units for integer operations
  - No forwarding!

Scoreboard Architecture (CDC 6600)

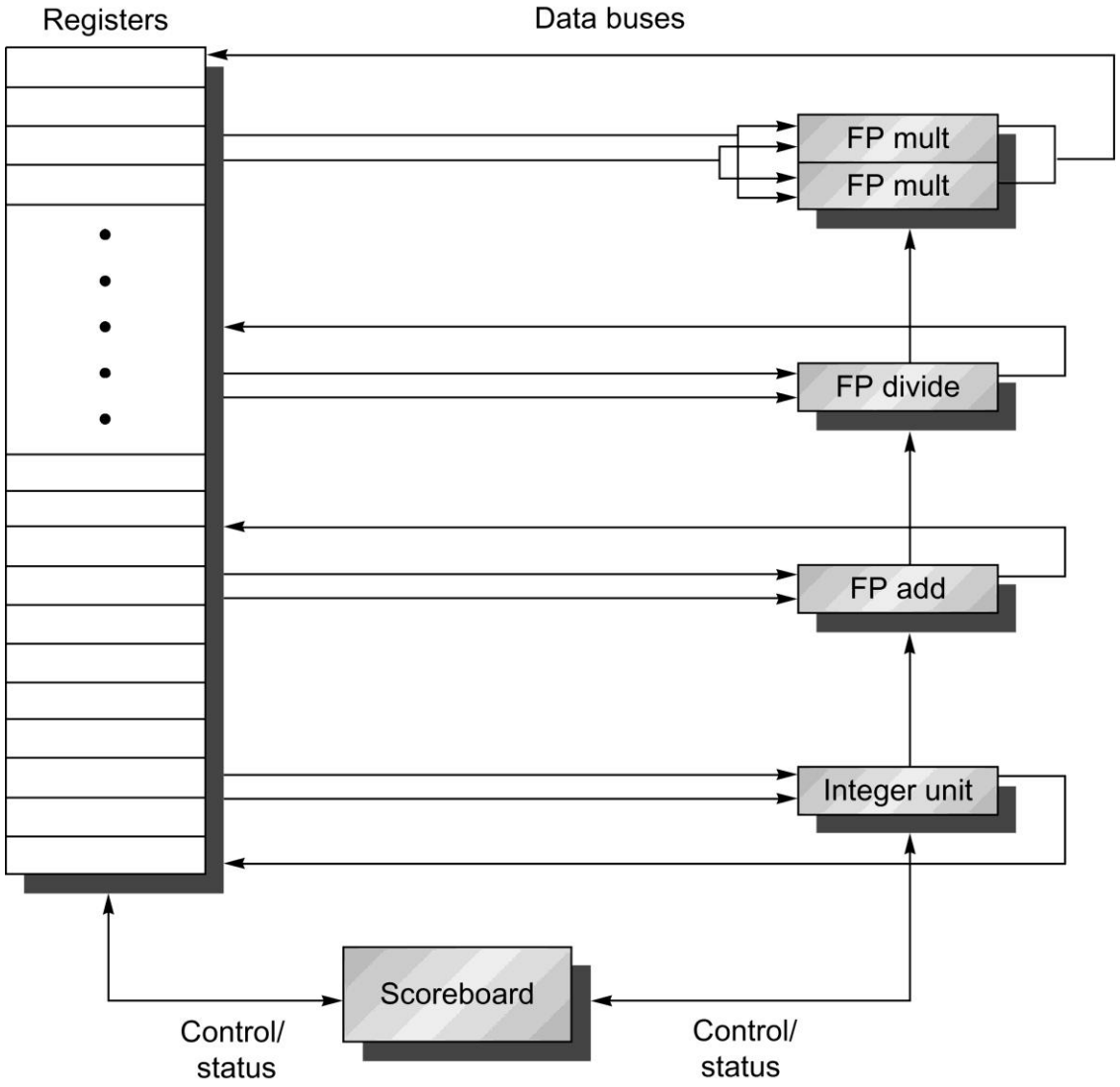

Instruction to scoreboard ⇨ data dependences ⇨ hazard detection and resolution centralized

Scoreboard: decides when the instruction can ***execute*** and when it can ***write its result***

Scoreboard Implications

- Out-of-order completion => WAR, WAW hazards?
- Solutions for WAR:
  - Stall register *write-backs* until registers have been read.
  - Read registers only on the **Read Operands** stage
- Solutions for WAW:
  - Detect this hazard and stall the new instruction (no issue) until the previous instruction has completed/executed.
- There is no register renaming!
- Multiple instruction in execution stage => multiple execution units or pipelined execution units
- The Scoreboard keeps information about the dependencies of the instructions that have been issued.
- The Scoreboard-based pipeline replaces the ID stage with 2 stages: Issue and Read Operands

Four Stages of Scoreboard Control

- Issue: decode instruction & record data dependences & check for structural hazards (ID1)
  - Instructions issued in program order (for hazard checking)
  - Don't issue if structural hazard
  - Don't issue if instruction is output dependent on any previously issued but uncompleted instruction (no WAW hazards)
- Read operands: wait for data hazards to be resolved, then read registers (ID2)
  - All real dependencies (RAW hazards) resolved in this stage, since we wait for instructions to write back data.
  - No forwarding of data in this model!

Four Stages of Scoreboard Control

- Execution: execute the instruction on a functional unit (EX)
  - The functional unit begins execution upon receiving operands. When the result is ready, it notifies the scoreboard that it has completed execution.
- Write result: End of execution (WB)
  - Stall until there are no WAR hazards with previous instructions:

Example:

```
DIV.D    F0,F2,F4
ADD.D    F10,F0,F8
SUB.D    F8,F8,F14
```

CDC 6600 scoreboard would stall SUBD until ADDD reads operands

  - Instructions write their results into the register file as soon as they complete execution (assuming no WAR hazard)

Data structure: 3 parts of Scoreboard

- Instruction status: In which of the four stages is the instruction

- Functional unit status: Indicates the current state of the functional unit (FU). 9 fields per functional unit.

  Busy: Indicates whether the unit is busy or not
  Op: Operation to perform in the unit (e.g., + or –)
  Fi: Destination register
  Fj,Fk: Source-register numbers
  Qj,Qk: Functional units producing source registers Fj, Fk
  Rj,Rk: Flags indicating when Fj, Fk are ready and not yet read

- Register result status: Indicates which functional unit will write each register, if any. Empty when no pending instructions will write that register

Scoreboard Example

Instruction status:

Instruction		*j*	*k*	*Issue*	*Read Oper*	*Exec Comp*	*Write Result*
L.D	**F6**	**34+**	**R2**				
L.D	**F2**	**45+**	**R3**				
MULT.D	**F0**	**F2**	**F4**				
SUB.D	**F8**	**F6**	**F2**				
DIV.D	**F10**	**F0**	**F6**				
ADD.D	**F6**	**F8**	**F2**				

Functional unit status:

Time	*Name*	*Busy*	*Op*	*dest Fi*	*S1 Fj*	*S2 Fk*	*FU Qj*	*FU Qk*	*Fj? Rj*	*Fk? Rk*
	Integer	No								
	Mult1	No								
	Mult2	No								
	Add	No								
	Divide	No								

Register result status:

Clock	*F0*	*F2*	*F4*	*F6*	*F8*	*F10*	*F12*	...	*F30*
FU									

Detailed Scoreboard Pipeline Control

Instruction status	Wait until	Bookkeeping
Issue	Busy (FU)=No and result(D)=0 (struct hazard, WAW)	Busy(FU)← yes; Op(FU)← op; Fi(FU)← `D'; Fj(FU)← `S1'; Fk(FU)← `S2'; Qj← Result('S1'); Qk← Result(`S2'); Rj← not Qj; Rk← not Qk; Result('D')← FU;
Read operands	Rj and Rk (RAW)	Clear flags: Rj← No; Rk← No
Execution complete	Functional unit done	
Write result	∀f((Fj(f)≠Fi(FU) or Rj(f)=No) & (Fk(f)≠Fi(FU) or Rk(f)=No)) (WAR)	∀f(if Qj(f)=FU then Rj(f)← Yes); ∀f(if Qk(f)=FU then Rj(f)← Yes); Result(Fi(FU))← 0; Busy(FU)← No

Scoreboard Example: Cycle 1

Instruction status:

Instruction		*j*	*k*	*Issue*	*Read Oper*	*Exec Comp*	*Write Result*
LD	F6	34+	R2	1			
LD	F2	45+	R3				
MULTD	F0	F2	F4				
SUBD	F8	F6	F2				
DIVD	F10	F0	F6				
ADDD	F6	F8	F2				

Functional unit status:

Time	*Name*	*Busy*	*Op*	*dest Fi*	*S1 Fj*	*S2 Fk*	*FU Qj*	*FU Qk*	*Fj? Rj*	*Fk? Rk*
	Integer	Yes	Load	F6		R2				Yes
	Mult1	No								
	Mult2	No								
	Add	No								
	Divide	No								

Register result status:

Clock		*F0*	*F2*	*F4*	*F6*	*F8*	*F10*	*F12*	...	*F30*
1	*FU*				Integer					

Scoreboard Example: Cycle 2

Instruction status:

Instruction		*j*	*k*	*Issue*	*Read Oper*	*Exec Comp*	*Write Result*
LD	F6	34+	R2	1	2		
LD	F2	45+	R3				
MULTD	F0	F2	F4				
SUBD	F8	F6	F2				
DIVD	F10	F0	F6				
ADDD	F6	F8	F2				

Issue second LD?

No. Structural Hazard!

Functional unit status:

Time	*Name*	*Busy*	*Op*	*dest Fi*	*S1 Fj*	*S2 Fk*	*FU Qj*	*FU Qk*	*Fj? Rj*	*Fk? Rk*
	Integer	Yes	Load	F6		R2				No
	Mult1	No								
	Mult2	No								
	Add	No								
	Divide	No								

Register result status:

Clock		*F0*	*F2*	*F4*	*F6*	*F8*	*F10*	*F12*	...	*F30*
2	*FU*				Integer					

Scoreboard Example: Cycle 3

Instruction status:

Instruction		*j*	*k*	*Issue*	*Read Oper*	*Exec Comp*	*Write Result*
LD	F6	34+	R2	1	2	3	
LD	F2	45+	R3				
MULTD	F0	F2	F4				
SUBD	F8	F6	F2				
DIVD	F10	F0	F6				
ADDD	F6	F8	F2				

Issue MULTD?

No. In order issue!

Functional unit status:

Time	*Name*	*Busy*	*Op*	*dest Fi*	*S1 Fj*	*S2 Fk*	*FU Qj*	*FU Qk*	*Fj? Rj*	*Fk? Rk*
	Integer	Yes	Load	F6		R2				No
	Mult1	No								
	Mult2	No								
	Add	No								
	Divide	No								

Register result status:

Clock		*F0*	*F2*	*F4*	*F6*	*F8*	*F10*	*F12*	...	*F30*
3	*FU*				Integer					

Scoreboard Example: Cycle 4

Instruction status:

Instruction		*j*	*k*	*Issue*	*Read Oper*	*Exec Comp*	*Write Result*
LD	F6	34+	R2	1	2	3	4
LD	F2	45+	R3				
MULTD	F0	F2	F4				
SUBD	F8	F6	F2				
DIVD	F10	F0	F6				
ADDD	F6	F8	F2				

Functional unit status:

Time	*Name*	*Busy*	*Op*	*dest Fi*	*S1 Fj*	*S2 Fk*	*FU Qj*	*FU Qk*	*Fj? Rj*	*Fk? Rk*
	Integer	No								
	Mult1	No								
	Mult2	No								
	Add	No								
	Divide	No								

Register result status:

Clock		*F0*	*F2*	*F4*	*F6*	*F8*	*F10*	*F12*	...	*F30*
4	*FU*									

Scoreboard Example: Cycle 5

Instruction status:

Instruction		*j*	*k*	*Issue*	*Read Oper*	*Exec Comp*	*Write Result*
LD	F6	34+	R2	1	2	3	4
LD	F2	45+	R3	5			
MULTD	F0	F2	F4				
SUBD	F8	F6	F2				
DIVD	F10	F0	F6				
ADDD	F6	F8	F2				

Functional unit status:

Time	*Name*	*Busy*	*Op*	*dest Fi*	*S1 Fj*	*S2 Fk*	*FU Qj*	*FU Qk*	*Fj? Rj*	*Fk? Rk*
	Integer	Yes	Load	F2		R3				Yes
	Mult1	No								
	Mult2	No								
	Add	No								
	Divide	No								

Register result status:

Clock		*F0*	*F2*	*F4*	*F6*	*F8*	*F10*	*F12*	...	*F30*
5	*FU*		Integer							

Scoreboard Example: Cycle 6

Instruction status:

Instruction		*j*	*k*	*Issue*	*Read Oper*	*Exec Comp*	*Write Result*
LD	F6	34+	R2	1	2	3	4
LD	F2	45+	R3	5	6		
MULTD	F0	F2	F4	6			
SUBD	F8	F6	F2				
DIVD	F10	F0	F6				
ADDD	F6	F8	F2				

Functional unit status:

Time	*Name*	*Busy*	*Op*	*dest Fi*	*S1 Fj*	*S2 Fk*	*FU Qj*	*FU Qk*	*Fj? Rj*	*Fk? Rk*
	Integer	Yes	Load	F2		R3				No
	Mult1	Yes	Mult	F0	F2	F4	Integer		No	Yes
	Mult2	No								
	Add	No								
	Divide	No								

Register result status:

Clock		*F0*	*F2*	*F4*	*F6*	*F8*	*F10*	*F12*	...	*F30*
6	*FU*	Mult1	Integer							

Scoreboard Example: Cycle 7

Instruction status:

Instruction		*j*	*k*	*Issue*	*Read Oper*	*Exec Comp*	*Write Result*
LD	F6	34+	R2	1	2	3	4
LD	F2	45+	R3	5	6	7	
MULTD	F0	F2	F4	6			
SUBD	F8	F6	F2	7			
DIVD	F10	F0	F6				
ADDD	F6	F8	F2				

Read MULTD operands?

No. RAW Hazard!

Functional unit status:

Time	*Name*	*Busy*	*Op*	*dest Fi*	*S1 Fj*	*S2 Fk*	*FU Qj*	*FU Qk*	*Fj? Rj*	*Fk? Rk*
	Integer	Yes	Load	F2		R3				No
	Mult1	Yes	Mult	F0	F2	F4	Integer		No	Yes
	Mult2	No								
	Add	Yes	Sub	F8	F6	F2		Integer	Yes	No
	Divide	No								

Register result status:

Clock		*F0*	*F2*	*F4*	*F6*	*F8*	*F10*	*F12*	...	*F30*
7	*FU*	Mult1	Integer			Add				

Scoreboard Example: Cycle 8a

Instruction status:

Instruction		*j*	*k*	*Issue*	*Read Oper*	*Exec Comp*	*Write Result*
LD	F6	34+	R2	1	2	3	4
LD	F2	45+	R3	5	6	7	
MULTD	F0	F2	F4	6			
SUBD	F8	F6	F2	7			
DIVD	F10	F0	F6	8			
ADDD	F6	F8	F2				

Functional unit status:

Time	*Name*	*Busy*	*Op*	*dest Fi*	*S1 Fj*	*S2 Fk*	*FU Qj*	*FU Qk*	*Fj? Rj*	*Fk? Rk*
	Integer	Yes	Load	F2		R3				No
	Mult1	Yes	Mult	F0	F2	F4	Integer		No	Yes
	Mult2	No								
	Add	Yes	Sub	F8	F6	F2		Integer	Yes	No
	Divide	Yes	Div	F10	F0	F6	Mult1		No	Yes

Register result status:

Clock		*F0*	*F2*	*F4*	*F6*	*F8*	*F10*	*F12*	*...*	*F30*
8	*FU*	Mult1	Integer			Add	Divide			

Scoreboard Example: Cycle 8b

Instruction status:

Instruction		*j*	*k*	*Issue*	*Read Oper*	*Exec Comp*	*Write Result*
LD	F6	34+	R2	1	2	3	4
LD	F2	45+	R3	5	6	7	8
MULTD	F0	F2	F4	6			
SUBD	F8	F6	F2	7			
DIVD	F10	F0	F6	8			
ADDD	F6	F8	F2				

Functional unit status:

Time	*Name*	*Busy*	*Op*	*dest Fi*	*S1 Fj*	*S2 Fk*	*FU Qj*	*FU Qk*	*Fj? Rj*	*Fk? Rk*
	Integer	No								
	Mult1	Yes	Mult	F0	F2	F4			Yes	Yes
	Mult2	No								
	Add	Yes	Sub	F8	F6	F2			Yes	Yes
	Divide	Yes	Div	F10	F0	F6	Mult1		No	Yes

Register result status:

Clock		*F0*	*F2*	*F4*	*F6*	*F8*	*F10*	*F12*	*...*	*F30*
8	*FU*	Mult1				Add	Divide			

Scoreboard Example: Cycle 9

Instruction status:

Instruction		*j*	*k*	*Issue*	*Read Oper*	*Exec Comp*	*Write Result*
LD	F6	34+	R2	1	2	3	4
LD	F2	45+	R3	5	6	7	8
MULTD	F0	F2	F4	6			
SUBD	F8	F6	F2	7			
DIVD	F10	F0	F6	8			
ADDD	F6	F8	F2				

Read MULTD & SUBD operands? Yes

Issue ADDD?

No. Structural hazard!

Functional unit status:

Execution Latency

Time	*Name*	*Busy*	*Op*	*dest Fi*	*S1 Fj*	*S2 Fk*	*FU Qj*	*FU Qk*	*Fj? Rj*	*Fk? Rk*
	Integer	No								
10	Mult1	Yes	Mult	F0	F2	F4			No	No
	Mult2	No								
2	Add	Yes	Sub	F8	F6	F2			No	No
	Divide	Yes	Div	F10	F0	F6	Mult1		No	Yes

Register result status:

Clock		*F0*	*F2*	*F4*	*F6*	*F8*	*F10*	*F12*	*...*	*F30*
9	*FU*	Mult1				Add	Divide			

Scoreboard Example: Cycle 10

Instruction status:

Instruction		*j*	*k*	*Issue*	*Read Oper*	*Exec Comp*	*Write Result*
LD	F6	34+	R2	1	2	3	4
LD	F2	45+	R3	5	6	7	8
MULTD	F0	F2	F4	6	9		
SUBD	F8	F6	F2	7	9		
DIVD	F10	F0	F6	8			
ADDD	F6	F8	F2				

Functional unit status:

Time	*Name*	*Busy*	*Op*	*dest Fi*	*S1 Fj*	*S2 Fk*	*FU Qj*	*FU Qk*	*Fj? Rj*	*Fk? Rk*
	Integer	No								
9	Mult1	Yes	Mult	F0	F2	F4			No	No
	Mult2	No								
1	Add	Yes	Sub	F8	F6	F2			No	No
	Divide	Yes	Div	F10	F0	F6	Mult1		No	Yes

Register result status:

Clock		*F0*	*F2*	*F4*	*F6*	*F8*	*F10*	*F12*	*...*	*F30*
10	*FU*	Mult1				Add	Divide			

Scoreboard Example: Cycle 11

Instruction status:

Instruction		*j*	*k*	*Issue*	*Read Oper*	*Exec Comp*	*Write Result*
LD	F6	34+	R2	1	2	3	4
LD	F2	45+	R3	5	6	7	8
MULTD	F0	F2	F4	6	9		
SUBD	F8	F6	F2	7	9	11	
DIVD	F10	F0	F6	8			
ADDD	F6	F8	F2				

Functional unit status:

Time	*Name*	*Busy*	*Op*	*dest Fi*	*S1 Fj*	*S2 Fk*	*FU Qj*	*FU Qk*	*Fj? Rj*	*Fk? Rk*
	Integer	No								
8	Mult1	Yes	Mult	F0	F2	F4			No	No
	Mult2	No								
0	Add	Yes	Sub	F8	F6	F2			No	No
	Divide	Yes	Div	F10	F0	F6	Mult1		No	Yes

Register result status:

Clock		*F0*	*F2*	*F4*	*F6*	*F8*	*F10*	*F12*	*...*	*F30*
11	*FU*	Mult1				Add	Divide			

Scoreboard Example: Cycle 12

Instruction status:

Instruction		*j*	*k*	*Issue*	*Read Oper*	*Exec Comp*	*Write Result*
LD	F6	34+	R2	1	2	3	4
LD	F2	45+	R3	5	6	7	8
MULTD	F0	F2	F4	6	9		
SUBD	F8	F6	F2	7	9	11	12
DIVD	F10	F0	F6	8			
ADDD	F6	F8	F2				

Read DIVD Operands?

No. RAW Hazard!

Functional unit status:

Time	*Name*	*Busy*	*Op*	*dest Fi*	*S1 Fj*	*S2 Fk*	*FU Qj*	*FU Qk*	*Fj? Rj*	*Fk? Rk*
	Integer	No								
7	Mult1	Yes	Mult	F0	F2	F4			No	No
	Mult2	No								
	Add	No								
	Divide	Yes	Div	F10	F0	F6	Mult1		No	Yes

Register result status:

Clock		*F0*	*F2*	*F4*	*F6*	*F8*	*F10*	*F12*	...	*F30*
12	*FU*	Mult1					Divide			

Scoreboard Example: Cycle 13

Instruction status:

Instruction		*j*	*k*	*Issue*	*Read Oper*	*Exec Comp*	*Write Result*
LD	F6	34+	R2	1	2	3	4
LD	F2	45+	R3	5	6	7	8
MULTD	F0	F2	F4	6	9		
SUBD	F8	F6	F2	7	9	11	12
DIVD	F10	F0	F6	8			
ADDD	F6	F8	F2	13			

Functional unit status:

Time	*Name*	*Busy*	*Op*	*dest Fi*	*S1 Fj*	*S2 Fk*	*FU Qj*	*FU Qk*	*Fj? Rj*	*Fk? Rk*
	Integer	No								
6	Mult1	Yes	Mult	F0	F2	F4			No	No
	Mult2	No								
	Add	Yes	Add	F6	F8	F2			Yes	Yes
	Divide	Yes	Div	F10	F0	F6	Mult1		No	Yes

Register result status:

Clock		*F0*	*F2*	*F4*	*F6*	*F8*	*F10*	*F12*	...	*F30*
13	*FU*	Mult1			Add		Divide			

Scoreboard Example: Cycle 14

Instruction status:

Instruction		*j*	*k*	*Issue*	*Read Oper*	*Exec Comp*	*Write Result*
LD	F6	34+	R2	1	2	3	4
LD	F2	45+	R3	5	6	7	8
MULTD	F0	F2	F4	6	9		
SUBD	F8	F6	F2	7	9	11	12
DIVD	F10	F0	F6	8			
ADDD	F6	F8	F2	13	14		

Functional unit status:

Time	*Name*	*Busy*	*Op*	*dest Fi*	*S1 Fj*	*S2 Fk*	*FU Qj*	*FU Qk*	*Fj? Rj*	*Fk? Rk*
	Integer	No								
5	Mult1	Yes	Mult	F0	F2	F4			No	No
	Mult2	No								
2	Add	Yes	Add	F6	F8	F2			No	No
	Divide	Yes	Div	F10	F0	F6	Mult1		No	Yes

Register result status:

Clock		*F0*	*F2*	*F4*	*F6*	*F8*	*F10*	*F12*	*...*	*F30*
14	*FU*	Mult1			Add		Divide			

Scoreboard Example: Cycle 15

Instruction status:

Instruction		*j*	*k*	*Issue*	*Read Oper*	*Exec Comp*	*Write Result*
LD	F6	34+	R2	1	2	3	4
LD	F2	45+	R3	5	6	7	8
MULTD	F0	F2	F4	6	9		
SUBD	F8	F6	F2	7	9	11	12
DIVD	F10	F0	F6	8			
ADDD	F6	F8	F2	13	14		

Functional unit status:

Time	*Name*	*Busy*	*Op*	*dest Fi*	*S1 Fj*	*S2 Fk*	*FU Qj*	*FU Qk*	*Fj? Rj*	*Fk? Rk*
	Integer	No								
4	Mult1	Yes	Mult	F0	F2	F4			No	No
	Mult2	No								
1	Add	Yes	Add	F6	F8	F2			No	No
	Divide	Yes	Div	F10	F0	F6	Mult1		No	Yes

Register result status:

Clock		*F0*	*F2*	*F4*	*F6*	*F8*	*F10*	*F12*	*...*	*F30*
15	*FU*	Mult1			Add		Divide			

Scoreboard Example: Cycle 16

Instruction status:

Instruction		*j*	*k*	*Issue*	*Read Oper*	*Exec Comp*	*Write Result*
LD	F6	34+	R2	1	2	3	4
LD	F2	45+	R3	5	6	7	8
MULTD	F0	F2	F4	6	9		
SUBD	F8	F6	F2	7	9	11	12
DIVD	F10	F0	F6	8			
ADDD	F6	F8	F2	13	14	16	

Functional unit status:

Time	*Name*	*Busy*	*Op*	*dest Fi*	*S1 Fj*	*S2 Fk*	*FU Qj*	*FU Qk*	*Fj? Rj*	*Fk? Rk*
	Integer	No								
3	Mult1	Yes	Mult	F0	F2	F4			No	No
	Mult2	No								
0	Add	Yes	Add	F6	F8	F2			No	No
	Divide	Yes	Div	F10	F0	F6	Mult1		No	Yes

Register result status:

Clock		*F0*	*F2*	*F4*	*F6*	*F8*	*F10*	*F12*	*...*	*F30*
16	*FU*	Mult1			Add		Divide			

Scoreboard Example: Cycle 17

Instruction status:

Instruction		*j*	*k*	*Issue*	*Read Oper*	*Exec Comp*	*Write Result*
LD	F6	34+	R2	1	2	3	4
LD	F2	45+	R3	5	6	7	8
MULTD	F0	F2	F4	6	9		
SUBD	F8	F6	F2	7	9	11	12
DIVD	F10	F0	F6	8			
ADDD	F6	F8	F2	13	14	16	

Write ADDD result?

No. WAR hazard!

Functional unit status:

Time	*Name*	*Busy*	*Op*	*dest Fi*	*S1 Fj*	*S2 Fk*	*FU Qj*	*FU Qk*	*Fj? Rj*	*Fk? Rk*
	Integer	No								
2	Mult1	Yes	Mult	F0	F2	F4			No	No
	Mult2	No								
	Add	Yes	Add	F6	F8	F2			No	No
	Divide	Yes	Div	F10	F0	F6	Mult1		No	Yes

Register result status:

Clock		*F0*	*F2*	*F4*	*F6*	*F8*	*F10*	*F12*	...	*F30*
17	*FU*	Mult1			Add		Divide			

Scoreboard Example: Cycle 18

Instruction status:

Instruction		*j*	*k*	*Issue*	*Read Oper*	*Exec Comp*	*Write Result*
LD	F6	34+	R2	1	2	3	4
LD	F2	45+	R3	5	6	7	8
MULTD	F0	F2	F4	6	9		
SUBD	F8	F6	F2	7	9	11	12
DIVD	F10	F0	F6	8			
ADDD	F6	F8	F2	13	14	16	

Functional unit status:

Time	*Name*	*Busy*	*Op*	*dest Fi*	*S1 Fj*	*S2 Fk*	*FU Qj*	*FU Qk*	*Fj? Rj*	*Fk? Rk*
	Integer	No								
1	Mult1	Yes	Mult	F0	F2	F4			No	No
	Mult2	No								
	Add	Yes	Add	F6	F8	F2			No	No
	Divide	Yes	Div	F10	F0	F6	Mult1		No	Yes

Register result status:

Clock		*F0*	*F2*	*F4*	*F6*	*F8*	*F10*	*F12*	*...*	*F30*
18	*FU*	Mult1			Add		Divide			

Scoreboard Example: Cycle 19

Instruction status:

Instruction		*j*	*k*	*Issue*	*Read Oper*	*Exec Comp*	*Write Result*
LD	F6	34+	R2	1	2	3	4
LD	F2	45+	R3	5	6	7	8
MULTD	F0	F2	F4	6	9	19	
SUBD	F8	F6	F2	7	9	11	12
DIVD	F10	F0	F6	8			
ADDD	F6	F8	F2	13	14	16	

Functional unit status:

Time	*Name*	*Busy*	*Op*	*dest Fi*	*S1 Fj*	*S2 Fk*	*FU Qj*	*FU Qk*	*Fj? Rj*	*Fk? Rk*
	Integer	No								
0	Mult1	Yes	Mult	F0	F2	F4			No	No
	Mult2	No								
	Add	Yes	Add	F6	F8	F2			No	No
	Divide	Yes	Div	F10	F0	F6	Mult1		No	Yes

Register result status:

Clock		*F0*	*F2*	*F4*	*F6*	*F8*	*F10*	*F12*	...	*F30*
19	*FU*	Mult1			Add		Divide			

Scoreboard Example: Cycle 20

Instruction status:

Instruction		*j*	*k*	*Issue*	*Read Oper*	*Exec Comp*	*Write Result*
LD	F6	34+	R2	1	2	3	4
LD	F2	45+	R3	5	6	7	8
MULTD	F0	F2	F4	6	9	19	20
SUBD	F8	F6	F2	7	9	11	12
DIVD	F10	F0	F6	8			
ADDD	F6	F8	F2	13	14	16	

Functional unit status:

Time	*Name*	*Busy*	*Op*	*dest Fi*	*S1 Fj*	*S2 Fk*	*FU Qj*	*FU Qk*	*Fj? Rj*	*Fk? Rk*
	Integer	No								
	Mult1	No								
	Mult2	No								
	Add	Yes	Add	F6	F8	F2			No	No
	Divide	Yes	Div	F10	F0	F6			Yes	Yes

Register result status:

Clock		*F0*	*F2*	*F4*	*F6*	*F8*	*F10*	*F12*	...	*F30*
20	*FU*				Add		Divide			

Scoreboard Example: Cycle 21

Instruction status:

Instruction		*j*	*k*	*Issue*	*Read Oper*	*Exec Comp*	*Write Result*
LD	F6	34+	R2	1	2	3	4
LD	F2	45+	R3	5	6	7	8
MULTD	F0	F2	F4	6	9	19	20
SUBD	F8	F6	F2	7	9	11	12
DIVD	F10	F0	F6	8	21		
ADDD	F6	F8	F2	13	14	16	

No WAR hazard anymore.

Functional unit status:

Time Name	*Busy*	*Op*	*dest Fi*	*S1 Fj*	*S2 Fk*	*FU Qj*	*FU Qk*	*Fj? Rj*	*Fk? Rk*
Integer	No								
Mult1	No								
Mult2	No								
Add	Yes	Add	F6	F8	F2			No	No
Divide	Yes	Div	F10	F0	F6			No	No

Register result status:

Clock		*F0*	*F2*	*F4*	*F6*	*F8*	*F10*	*F12*	...	*F30*
21	*FU*				Add		Divide			

Scoreboard Example: Cycle 22

Instruction status:

Instruction		*j*	*k*	*Issue*	*Read Oper*	*Exec Comp*	*Write Result*
LD	F6	34+	R2	1	2	3	4
LD	F2	45+	R3	5	6	7	8
MULTD	F0	F2	F4	6	9	19	20
SUBD	F8	F6	F2	7	9	11	12
DIVD	F10	F0	F6	8	21		
ADDD	F6	F8	F2	13	14	16	22

Functional unit status:

Time	*Name*	*Busy*	*Op*	*dest Fi*	*S1 Fj*	*S2 Fk*	*FU Qj*	*FU Qk*	*Fj? Rj*	*Fk? Rk*
	Integer	No								
	Mult1	No								
	Mult2	No								
	Add	No								
39	Divide	Yes	Div	F10	F0	F6			No	No

Register result status:

Clock		*F0*	*F2*	*F4*	*F6*	*F8*	*F10*	*F12*	...	*F30*
22	*FU*						Divide			

After a few clock cycles…

Scoreboard Example: Cycle 61

Instruction status:

Instruction		*j*	*k*	*Issue*	*Read Oper*	*Exec Comp*	*Write Result*
LD	F6	34+	R2	1	2	3	4
LD	F2	45+	R3	5	6	7	8
MULTD	F0	F2	F4	6	9	19	20
SUBD	F8	F6	F2	7	9	11	12
DIVD	F10	F0	F6	8	21	61	
ADDD	F6	F8	F2	13	14	16	22

Functional unit status:

Time	*Name*	*Busy*	*Op*	*dest Fi*	*S1 Fj*	*S2 Fk*	*FU Qj*	*FU Qk*	*Fj? Rj*	*Fk? Rk*
	Integer	No								
	Mult1	No								
	Mult2	No								
	Add	No								
0	Divide	Yes	Div	F10	F0	F6			No	No

Register result status:

Clock		*F0*	*F2*	*F4*	*F6*	*F8*	*F10*	*F12*	...	*F30*
61	*FU*						Divide			

Scoreboard Example: Cycle 62

Instruction status:

Instruction		*j*	*k*	*Issue*	*Read Oper*	*Exec Comp*	*Write Result*
LD	F6	34+	R2	1	2	3	4
LD	F2	45+	R3	5	6	7	8
MULTD	F0	F2	F4	6	9	19	20
SUBD	F8	F6	F2	7	9	11	12
DIVD	F10	F0	F6	8	21	61	62
ADDD	F6	F8	F2	13	14	16	22

Functional unit status:

Time	*Name*	*Busy*	*Op*	*dest Fi*	*S1 Fj*	*S2 Fk*	*FU Qj*	*FU Qk*	*Fj? Rj*	*Fk? Rk*
	Integer	No								
	Mult1	No								
	Mult2	No								
	Add	No								
	Divide	No								

Register result status:

Clock		*F0*	*F2*	*F4*	*F6*	*F8*	*F10*	*F12*	...	*F30*
62	*FU*									

Scoreboard Example: Cycle 62

Instruction status:

Instruction		*j*	*k*	*Issue*	*Read Oper*	*Exec Comp*	*Write Result*
LD	F6	34+	R2	1	2	3	4
LD	F2	45+	R3	5	6	7	8
MULTD	F0	F2	F4	6	9	19	20
SUBD	F8	F6	F2	7	9	11	12
DIVD	F10	F0	F6	8	21	61	62
ADDD	F6	F8	F2	13	14	16	22

In-order issue?

Out-of-order execute?

Out-of-order commit?

Functional unit status:

Time	*Name*	*Busy*	*Op*	*dest Fi*	*S1 Fj*	*S2 Fk*	*FU Qj*	*FU Qk*	*Fj? Rj*	*Fk? Rk*
	Integer	No								
	Mult1	No								
	Mult2	No								
	Add	No								
	Divide	No								

Register result status:

Clock		*F0*	*F2*	*F4*	*F6*	*F8*	*F10*	*F12*	...	*F30*
62	*FU*									

CDC 6600 Scoreboard

- Speedup 1.7 for FORTRAN programs; 2.5 by hand (outdated measurements)
- Limitations of 6600 scoreboard:
  - No forwarding hardware
  - Limited to instructions in basic block (small window)
  - Small number of functional units (structural hazards), especially integer/load store units
    - Do not issue on structural hazards
  - Wait for WAR hazards
  - Prevent WAW hazards